United Kingdom Atomic Energy Authority

ATOMIC WEAPONS RESEARCH ESTABLISHMENT

AWRE REPORT NO. 0-70/65

A New Long-Period Vertical-Component Seismometer

A. D. Beach

Recommended for issue by
F. E. Whiteway, Superintendent

Approved by
I. Maddock, Assistant Director

550.34.08

C1
C8

TABLE OF CONTENTS

		Page
	SUMMARY	3
1.	INTRODUCTION	3
2.	HISTORY	4
	2.1 The LaCoste Suspension	4
	2.2 Leaf-Spring Suspension	5
	2.3 The VS3 Seismometer	6
3.	GENERAL REQUIREMENTS FOR THE VS4 SEISMOMETER	7
	3.1 Pendulum Performance Requirements	7
	3.2 Portability	8
4.	DESCRIPTION OF THE VS4	8
	4.1 The "Ni-Span D" Leaf-Springs	8
	4.2 The Cross-Spring Pivots	8
	4.3 Flotation Compensation	9
	4.4 Operating Adjustments	9
	4.5 Clamping Arrangements	10
	4.6 Tranducer Facilities	10
	4.7 Temperature Compensation	10
5.	PERFORMANCE	11
	5.1 Pendulum Performance	11
	5.2 Gross Performance	12
	5.2.1 External Influences on Pendulum Period	12
	5.2.2 Internal Influences on Long-Term Stability	12
	5.2.3 External Influences on Long-Term Stability	13
	5.2.4 Mechanical Characteristics	13
6.	CONCLUSIONS	14
7.	RECOMMENDATIONS	14
8.	ACKNOWLEDGMENTS	16
	APPENDIX A: EMPIRICAL THEORY OF THE LACOSTE SUSPENSION	17
	APPENDIX B: THEORY OF THE TRIANGULAR CANTILEVER LEAF SPRING	19
	APPENDIX C: GLOSSARY OF TECHNICAL TERMS	22
	FIGURES 1 - 18	25

Appendix C is a glossary of technical terms. Those unfamiliar with seismometer design may find it helpful to familiarise themselves with the terminology before reading the main text.

SUMMARY

A seismometer is described whose performance is intended to be comparable with the best existing vault instruments and yet which should be suitable for field work at remote sites. It incorporates a new type of leaf-spring suspension, which allows long periods to be attained, yet permits severe handling of the fully assembled instrument.

The leaf-spring suspension is found to be superior to the usual helical spring system, in that transverse and other modes of vibration of the spring itself are of higher frequency than most noise sources, thereby avoiding resonances which can lead to spurious long-period response.

1. INTRODUCTION

In 1959, the Field Experiments Division of AWRE started to consider the problems involved in the detection of underground nuclear explosions. It became apparent from the findings of the 1958 "Geneva Conference of Experts" that considerable research would be required into the detection of both short-period body waves and of long-period surface waves emanating from all seismic sources. It was also apparent that instrumental techniques required some improvement in short-period seismometers, and considerable improvement in long-period seismometers.

The Instrument Engineering Section of HFE (now C.P.A.), following some exploratory work, first improved on existing designs of long-period seismometers and produced the VSI, vertical-component instrument (Figure 1). The same basic suspension was used as in many such existing seismometers, minor changes being made, such as in the spring material used, and frame design (common with the matching horizontal-component instrument).

In 1960, Dr. P. L. Willmore suggested the application of leaf-springs to long-period vertical-component seismometer suspensions, and the design parameters of long-period seismometers were investigated with respect to this principle. A leaf-spring suspension had already proved successful in the well-known Willmore short-period seismometer.

2. HISTORY

2.1 The LaCoste Suspension

Until 1934, long-period vertical-component seismometers were almost non-existent as practical instruments, consisting either of large inertial masses suspended by very long helical springs, or of moderately compact arrangement but with poor period stability (linearity) due to the introduction of non-linear negative restoring forces.

L. J. B. LaCoste [1,2] then introduced the first practical linear spring suspension system, by means of which periods of the order of 100 s can be obtained from an instrument whose greatest dimension is less than a metre (see Appendix A).

The LaCoste suspension is shown in its practical form in Figure 1 and diagrammatically in Figure 2. The mass W, is fixed on a boom at distance d, from the frictionless pivot, P, and is supported by the helical spring, length L, which is attached to the boom and to the back support at the frictionless hinges H_1 and H_2 respectively. Adjustments A-A for spring tension and B-B for period of oscillation are arranged at H_2. (The diagram shows the simplest case where $H_1P = H_2P$, though this is not a criterion of operation.)

LaCoste showed that for the boom to be in equilibrium in all positions (infinite period), one of the conditions is that the tension T, of the spring must be proportional to L, the distance between H_1 and H_2. This means that when the spring has zero extension it has zero length.

It is manifestly impossible for a helical spring of cylindrical format to have actual zero physical length, but helical springs can be wound in such a way [1] that, when the coils are tightly closed, it has a residual tension equal to the tension of a true zero-length spring extended to the same length. Its tension will then be equal to that of the equivalent zero-length spring until it is stretched beyond its limit of proportionality.

In the LaCoste system, there are two criteria that must be fulfilled to a high degree of accuracy, if long periods are to be obtained. First, the magnitude of T must be proportional to L, and, second, the direction of the vector T must pass from H_1 through the fixed point corresponding to H_2 in Figure 2. The latter may seem self-evident, but must be considered when examining spring systems for which H_2 is not a point fixed to the base.

---

1. L. J. B. LaCoste: (1934) "A New Type Long Period Vertical Seismograph". Physics, 5, 178 - 180
2. L. J. B. LaCoste: "A Simplification in the Condition for the Zero-Length Spring Seismograph". Geophys. Suppl., 6, 129

2.2 The Leaf-Spring Suspension

The chief disadvantage of the LaCoste suspension, in its usual form, is that high-frequency components of ground motion may set the spring into free oscillations, inducing long-period displacement of the boom. Dr. P. L. Willmore therefore suggested that the helical spring should be replaced by a suspension wire attached to the tip of an inclined leaf-spring, for which the natural frequencies of the several modes of vibration would be well above that of any signals likely to be received through the ground.*

The theory of the leaf-spring is given in Appendix B, and shows that a triangular cantilever of constant thickness, clamped at its base and loaded at its apex, will bend into a circular arc; also that a triangular leaf-spring of length L, having a relaxed position of the form of a circular arc of included angle 2 radians, will extend flat when the appropriate load W is acting at its apex (Figure 3), the spring tip moving through an arc also of length L. Under this condition Figure 3 shows how, for small amplitudes, the load W will oscillate on the apex of the triangular spring almost exactly as it would if attached to a helical spring of the same length L, fixed at the point F, the approximation being, of course, due to the arcuate movement of the leaf-spring tip. It can be shown (empirically, by graphical construction) that the locus of the spring tip is the arc of a circle of radius ¾L.

Figure 4 shows how the simple leaf-spring geometry (90° - 45° configuration) is applied to obtain the analogy of the LaCoste helical-spring suspension shown in Figure 2. Figure 4 is self-explanatory. Ideally, the tension vector (i.e., both magnitude and direction of the tension T) is represented by H_2H_1, where H_2 is the intersection of the suspension wire with the vertical through P when the boom is horizontal. When the spring-tip is at H_2 this is in fact the case, but for positions of the spring-tip away from H_2, there is an approximation involved, illustrated in Figure 5.

In Figure 5, the dotted spiral-form curve (plotted by graphical construction) shows the ideal locus of the spring tip, the markers being for 10° intervals of θ. The actual locus is shown by the dashed circular arc of radius ¾L. The actual locus can be seen to be outside the spiral curve for all positions of the boom, making s, the moment arm of the tension vector, slightly too large as the boom moves from the horizontal. The spiral form of the ideal locus also gives asymmetry to the approximation. This effect is at least partially compensated by a second approximation, which is that the ideal tension would be proportional to L minus the straight-line distance of the spring-tip from H_2, whereas the actual tension is proportional to L minus the circumferential distance around the spring-tip locus from H_2, giving a slightly smaller value of T to balance the error in s.

---

* This system is the subject of Patent Application Number 24878/62.

2.3 The VS3 Seismometer

Using this theory, it was decided to make a test instrument in which the properties of the leaf-spring suspension could be determined experimentally. Its mechanical configuration can be explained by reference to Figures 4, 6 and 7. The main problem with the configuration shown in Figure 4 is that it is difficult to adjust the period and tension by moving the fixing point of the spring, due to torsional loading on the spring mounting. The only other place where adjustments could be made is on the boom itself. Therefore, a rearrangement of the geometry was considered, the first idea being that shown in Figure 6.

Mr. A. C. Christmas, who carried out the engineering design of the VS1 and VS3, pointed out that greater compactness could be obtained by inverting the spring and wire suspension, with the mass position laterally reversed. The new arrangement is shown in Figure 7, and incorporates a balanced beam which replaces the boom shown in Figure 6, following a suggestion by Dr. Willmore. The beam is designed to be volume symmetrical about P so that atmospheric buoyancy is balanced. Dr. Willmore also suggested that the hinge-point P could be made the axis of a pair of cross-spring pivots. H_2 becomes the intersection of the normal to the beam through P (for all beam positions) and the tension vector, and H_1 is now the fixing point of the suspension wire to the base. Figure 8 is a photograph of the test-bed, the VS3 seismometer.

In Figure 8 the inertial mass can be seen at the left-hand end of the balanced beam, with a Perspex flotation compensator at its mirror position. Two Ni-Span C leaf springs are clamped in a shaft near the compensator. Rotation of this shaft provides coarse tension adjustments. The apices of the springs are attached via wires to an adjustable anchorage mounted on an upright projecting through the beam from the base. Movement of this anchorage enables the period and tension to be adjusted.

The VS3 enabled the following conclusions to be drawn:-

(a) The leaf-spring suspension is superior in many respects to the helical-spring suspension, as regards pendulum performance.

(b) The balanced-beam configuration is inefficient, in that the energy content of a simple leaf-spring suspension is small, and an adequately stiff beam is rather massive, leading to significant loss of dynamic efficiency (see Appendix C).

The leaf-spring principle, having been confirmed, and the balanced-beam system shown inefficient, it was decided to develop a new instrument, viz.,

the VS4. The broad lines of this instrument were laid down by Mr. E. W. Stevens, and correspond closely with the original system as in Figure 4, but with the period and tension adjustments on the spring mounting. It was thought that suitable design should avoid the difficulties associated with the torsional loading.

3. GENERAL REQUIREMENTS FOR THE VS4 SEISMOMETER

No rigid specification was laid down for the instrument, the main object being to effect a significant improvement over existing designs. It was thought that improvements were necessary in pendulum performance and portability. These are discussed seperately below. The instrument was intended to cover the period range 10 to 100 s.

3.1 Pendulum Performance Requirements

Experience having been gained with the VS1 and some commercial seismometers, it was found that they all had some of the following faults:-

(a) Variation of period with boom deflection.

(b) Lack of restriction to one degree of freedom.

(c) Severe change in period with gross tilt of the seismometer in the plane of the suspension (partly inherent in the LaCoste suspension, but aggravated by helical springs of significant mass).

(d) Poor hinge properties. All the tested instruments had bending strip or wire hinges, which involve movement of the apparent pivot axis with boom deflection. Some suffered from hysteresis if incorrectly assembled.

(e) Helical-spring resonances of low frequency (normally about 10 c/s; 25 c/s for the VS1) which could be stimulated by ground motion in that part of the seismic spectrum, thus giving rise to spurious long-period response (caused by an effective shortening of the helical spring during resonance).

(f) No flotation compensation.

(g) Only partially effective temperature compensation, which was usually non-linear also (i.e., required a resetting of the compensation rate at different temperature).

The VS3 showed that (a) and (e) were eliminated entirely by the change to a leaf-spring suspension, and that (c) was greatly improved. The other faults were expected to be avoided by appropriate engineering design, and (g) by suitable choice of materials (see Appendix C, re Ni-Span alloys). Analysis of the problem of temperature compensation showed that expansion troubles could be eliminated by disposing materials, of similar expansion coefficients, symmetrically about the vertical through the boom hinge. Choice of Ni-Span D for the spring material should then allow linear temperature compensation to be affected with simple bimetal systems.

3.2 Portability

The Field Experiments Division of AWRE required not only a precision seismometer of high mechanical efficiency but also a field instrument, easy to adjust and calibrate, portable by one man, and of compact configuration. Commercial seismometers were usually designed for permanent installation, and required almost complete dismantling for even short transits. It was felt that the VS4 should be designed such that the removal of a few clamping bolts should enable the instrument to operate with its pendulum swinging freely after transportation. The leaf-spring suspension made this a practical possibility, whereas a helical-spring would involve severe complexity.

4. DESCRIPTION OF THE VS4

Figure 9 is a keyed drawing of the VS4, showing the cover in place, and Figure 10 is a photograph from the same viewpoint. Figure 11 is a general view from a different aspect.

4.1 The Ni-Span D Leaf-Springs

Four Ni-Span D leaf-springs are incorporated in the suspension so as to give sufficient tension to accomodate an adequately efficient mass distribution on the boom (see Appendix C - Dynamic Efficiency), consistent with each spring working well within the limit of proportionality of its load-extension curve.

4.2 The Cross-Spring Pivots

The design of the cross-spring pivots has been arranged [1] to minimise axis movement rather than to obtain zero stiffness, which is the principle used in some American seismometers [2]. The disadvantage of the zero stiffness arrangement is that its action depends upon axis movement, while good pendulum performance requires a fixed axis position. Ni-Span D alloy is used as

1. W. H. Wittrick: (February 1951) "The Properties of Crossed Flexure Pivots, and the Influence of the Point at which the Strips Cross". Aeronautical Quarterly, II, 272 - 279
2. J. H. Hamilton and E. Stephens: "New Developments in Seismological Instrumentation". Technical Report No. 62-1, The Geotechnical Corporation, Garland, Texas

the material for the cross-springs to eliminate change of stiffness with temperature. While the chosen cross-spring design minimises the adverse effect of transverse forces on the stiffness of the pivot, care has been taken to place the centre of gravity of the entire suspended sub-assembly as near as possible to the suspension point (H_1 in Figure 4). The pivots are spaced widely relative to pendulum length so as to restrict the pendulum to one degree of freedom.

4.3 Flotation Compensation

Flotation compensation is afforded by the sealed Perspex cylinder, seen best in Figure 12. This is intended to have the same volume-moment on that side of the pivot axis as the sum of the volume moments on the other side (see Appendix C - Flotation Compensation).

4.4 Operating Adjustments

When the LaCoste geometry is set to its "perfect" form of a 45° - 90° triangle, than, from simple theory, the suspension is metastable, i.e., has infinite period. However, in practice, the various flexure points of the suspension have enough stiffness to reduce the period considerably. Due to the low-mass suspension of the VS4, its period would be reduced to less than 10 s. Therefore, an inverted pendulum is incorporated above the pivot point in order to counterbalance the torque produced by the suspension. By moving the inverted pendulum mass vertically, the period required can be set approximately. This pendulum is not shown in the photographs but is fitted with the nut visible in the centre of Figure 12. Figure 13 shows the tension and period adjustments on the spring mounting, and demonstrates the operating position of the spring tensioning jig.

The fine period adjustment shifts the spring mounting parallel to the boom axis over a small range (± ¼ in.). This is sufficient to change the period by a few percent without detracting from the pendulum performance.

The spring tension jig, when in its operating position, pre-tensions the leaf-springs for transport, assembly or dismantling. Normally it is withdrawn only a few degrees, and so limits the movement of the springs should the suspension wire break when the seismometer is operating.

The tension adjustment rotates the spring mounting shaft about the spring clamp jaw-line. It has a differential-screw to allow centring of the boom at periods up to about 20 s, beyond which point a rider on the boom can be used.

4.5 Clamping Arrangements

The heads of two of the clamping bolts can be seen in each photograph of the VS4. There are two pairs, one pair being near the pivot axis, and the other at the free end of the boom. One bolt of each pair is a "reference" bolt and defines the zero position of the boom during assembly, and the other clamps the boom to the reference bolt's inner shoulder. These bolts are individually fitted during assembly, to a close tolerance which still allows a very smooth fit.

With this arrangement the period of oscillation can be set under laboratory conditions, the boom clamped, the instrument moved to a field vault, levelled, and the boom unclamped. The boom will then swing at the same period as before and the instrument will be ready for use after any slight adjustment which may be necessary to the tension to centre the position of the mass. A small circular bubble level is fitted to aid this operation.

4.6 Transducer Facilities

(See Appendix C for description of transducers used.) Three transducer positions are provided, so as to give great operational flexibility. The two inner positions are alongside the centre of gravity of the suspended subassembly, and, since the mass distribution is such as to give the pendulum a dynamic efficiency (see Appendix C) of 73%, a factor of 1.37 must be applied to convert transducer motion to ground motion (as well as normalising according to the response curve of the seismograph). The outer transducer correction factor is 0.653.

A calibration head, consisting of a standard micrometer barrel, is fitted at the outer tranducer position. When a displacement transducer is fitted, the head enables its linearity and magnification to be determined, while the head may also be fitted with a synchronous motor drive for velocity transducer linearity tests.

Damping should take place at the inner transducer positions, as they are alongside the centre of gravity, in order to minimise transverse forces on the cross-spring pivots. If heavy damping is arranged, both sides should contribute equally, for the same reason.

4.7 Temperature Compensation

When fitted, temperature compensation is achieved by replacing the shaft of the inverted pendulum period adjuster with a bimetal strip of the appropriate rate, leaving the inverted pendulum mass in the same position.

Temperature compensation is fitted only when the (at present) experimental batches of Ni-Span D are found to have an appreciable residual temperature dependence. It is hoped that eventually the perfected version of Ni-Span D will allow springs to be fitted whose temperature coefficient of stiffness is low enough for compensation not to be needed except in extreme conditions.

5. PERFORMANCE

5.1 Pendulum Performance

With the seismometer in a stable vault, experiments were carried out to determine:-

(a) Linearity of period as the boom was displaced from its central position.

(b) Freedom from structural vibrations with frequencies so low that resonances could be excited by typical seismic noise.

(c) Complete restriction of the suspension to the one degree of freedom required.

(d) Dynamic efficiency (see Appendix C). This was determined before complete assembly of the instrument, and was found to be 73%.

Results

(a) The period was found to be completely independent of boom position within the ±½° angular limit imposed by the mechanical stops.

(b) All mechanical vibrations that could be initiated by plucking or impulsing parts of the instrument were in the range of audible frequencies, none being lower than 50 c/s. No resonances whatever were found on driving the suspension with a signal generator, between 0.1 and 250 c/s.

(c) The suspended sub-assembly was found to be very rigidly linked to the base in both longitudinal and horizontal transverse directions. Provided the instrument was mounted on a hard smooth horizontal surface, a sharp blow, hard enough to shift the whole instrument bodily sideways by as much as an inch, failed to alter the position of the boom to any extent visible to the eye. This is not so for other vertical component long period seismometers investigated, because of the helical spring being stimulated into transverse vibrations.

5.2 Gross Performance

5.2.1 External Influences on Pendulum Period

Tests were initiated to determine the dependence of the pendulum period upon tilt of the whole instrument, and upon temperature changes.

It was found that, like all LaCoste suspension type, vertical component seismometers, tilting the suspension relative to the direction of gravity seriously affected the period. However, within the range of accuracy of the instrument's bubble level, there was no measurable change in period.

Temperature changes had no effect on the period.

5.2.2 Internal Influences on Long-Term Stability

During the initial tests, serious flexure was found in the spring mounting unit shown in the photographs. This was redesigned, and the fault almost eliminated. A residual amount of flexure was found to be due to the use of independent units between the spring clamping point and the hinge point. It is felt now that a single unit should have been designed to carry both suspension and hinge (see Section 7).

Residual flexure was accepted, pending redesign of this region of the instrument, and other tests commenced.

An important characteristic of a good vertical component seismometer is long-term stability, i.e., the stability of the position of the boom over long periods of time, perhaps six months or more. Early results with the VS4 showed an alarming tendency for a quite rapid drift away from the set position. This was eventually explained by observation of serious corrosion of the Ni-Span D leaf springs in the highly alkaline humid atmosphere of the vault. Maximum energy storage occurs on the surface of leaf springs, and it was this surface that was being removed by corrosion.

The corrosion was permanently stopped by applying a coat of aluminium in vacuum, with a top coat of silica. The thickness of the coatings was half a wavelength of yellow light and they had no observable effect on spring properties.

Sources of residual drift were rapidly located in the suspension wire fixing points, and eventually the instrument was found stable over a period of months.

However, residual flexure limited the upper end of the period range to about 20 s. It was hoped that the residual flexure would be eliminated by redesign, as mentioned above, but changing emphasis in the seismology programme resulted in the long period systems receiving low priority attention. A serviceable long period system had been established with VS1 and HS2 seismometers and the change to the VS4 system was eventually considered unnecessary. Work finally ceased on the VS4 project and the flexure problem has remained unsolved.

5.2.3 External Influences on Long-Term Stability

Temperature changes were not a problem in the thermally stable vaults used by the UKAEA, and little attention has been paid to temperature compensation of the VS4. There was, in any case, no serious dependence on temperature, and effort was concentrated on flotation (buoyancy) compensation.

The VS4 employs a comparatively low-mass high-volume inertial system and changes in the atmospheric density showed marked buoyancy effects upon an uncompensated version of the VS4. This was demonstrated by comparing the recordings of a microbarograph and of a VS4, when correlation was seen to be high despite totally different response curves. Fitting the compensator immediately reduced the flotation signal of the VS4 by about two orders, but left a residual that was very difficult to adjust to a sufficiently low level.

The reason for the difficulty lies in the very short moment arm over which the flotation compensation takes effect. Minute adjustments of the moment arm can be quite high fractions of the moment arm length. There is, therefore, a need for a vernier adjustment for the final setting (see Section 7).

5.2.4 Mechanical Characteristics

Although the VS4 design was not carried to completion, several new features in the mechanical system have proved successful. In particular, the clamping arrangement worked perfectly from the outset. The VS4 is probably the first long period vertical component seismometer to be transported in the fully assembled and set-up state. With the VS4 on a vault plinth, the period can be set, the system clamped, the instrument picked up by one man, tilted, shaken, inverted, transported under quite rugged conditions, and yet, when replaced on a plinth and levelled, the boom swings freely as soon as it is unclamped, and has precisely the period set beforehand.

Pendulum performance alone testifies to the fault-free operation of the cross-spring hinges. Being of Ni-Span D (aluminised and silica-coated for corrosion proofing) they were free from temperature effects and had undetectable flexural hysteresis and creep.

The adjustments for tension and period on the spring mounting unit, although ideally situated and easy to use, detracted from the mounting unit rigidity, and gave rise to a proportion of the residual flexure mentioned in Section 5.2.2. Just as convenient in practice was adjustment of the inverted pendulum (see Section 4.4) for period alteration, and movement of a rider on the boom for boom centring.

6. CONCLUSIONS

In view of the excellent pendulum performance of the VS4, the leaf-spring LaCoste suspension has been shown to have characteristics superior to those of similar systems incorporating helical springs. Provided the generally lower energy storage capacity can be tolerated, then the leaf-spring suspension should provide complete freedom from resonances which may lead to spurious long-period response.

Using the leaf-spring suspension, it should be possible to design long-period vertical component seismometers as portable and robust as the well-known Willmore Short-Period Seismometer Mark II, now used extensively in the UKAEA seismometer arrays.

Many points of the VS4 design proved extremely successful, and a developed form of the instrument could undoubtedly take its place alongside standard vault instruments, with the added advantages of portability and speed of setting-up.

7. RECOMMENDATIONS

As mentioned in Section 5.2.2, a redesign of the spring mount was found desirable in view of the residual flexure in the system. The full recommendation is that a single unit should replace the two units (spring mount and cross-spring hinge pillar) so that the entire suspension is contained in a structure stressed only in compression and tension.

In conjunction with this, it would be best to have the adjustments for period and boom centring in the form of movable masses on the boom itself.

The provision of three transducer positions gave great operational flexibility to the VS4, but a production instrument would need a complement of two transducers at the most and, in many cases, one would be sufficient, performing the functions of transducer and damping unit simultaneously.

In such a design it would be advantageous to provide a tension wire for each spring, each wire fixed to a point on a rigid bridge on the boom (impossible on the VS4 because of the transducers alongside the centre of gravity). The fixing point of the VS4 suspension wire inside the boom allowed only difficult access in the event of breakage.

In Section 5.2.3 were mentioned the difficulties of flotation compensation with the single cylinder and its associated short moment arm. A vernier adjustment is definitely needed in order to obtain perfect compensation. Possibly eccentrically mounted cylinders at the ends of the main cylinder, with a stiff pivoted connection, would serve.

It would be best to make the compensator in metal rather than the "Perspex" that was used in the VS4 design. Perspex is not completely impervious to air, nor is it a perfectly stable material. Probably the optimum material would have been Duralumin, sealed by welding and externally anodised.

The need for flotation compensation can be avoided if the instrument can be placed in a vacuum. This also avoids convection current effects.

A design based on these recommendations is shown sketched in Figures 14 and 15. These sketches show the proposed design actual size. The instrument is intended to be built into a vacuum-tight case, and operated under considerably reduced pressure (for example, less than 1 torr). The only remaining internal noise sources would be thermal noise from the transducer coils and Brownian motion in the inertial system. Notice that the rigid frame is the single suspension unit recommended above, and that it is fixed only indirectly to the baseplate and cover, so that it does not partake in flexure of these components. All components of the suspension system are in compression or tension or, at worst, flexural stress in the plane of their maximum stiffness. (Except of course, the spring!)

Messrs. Hilger and Watts Ltd, are licensed to manufacture an instrument based on the principles used in the VS4; they are taking note of the recommendations made and are further investigating the performance of the instrument.

8. ACKNOWLEDGMENTS

The author wishes to acknowledge the invaluable aid so willingly afforded by Dr. P. L. Willmore, and to thank Mr. I. Maddock for his encouragement during the design and development period.

There were, of course, a number of AWRE staff concerned in the design and engineering of the VS4. The team was headed by Mr. A. Skinner and an immense amount of design work was carried out by Mr. P. Osborne.

APPENDIX A

EMPERICAL THEORY OF THE LACOSTE SUSPENSION [1]

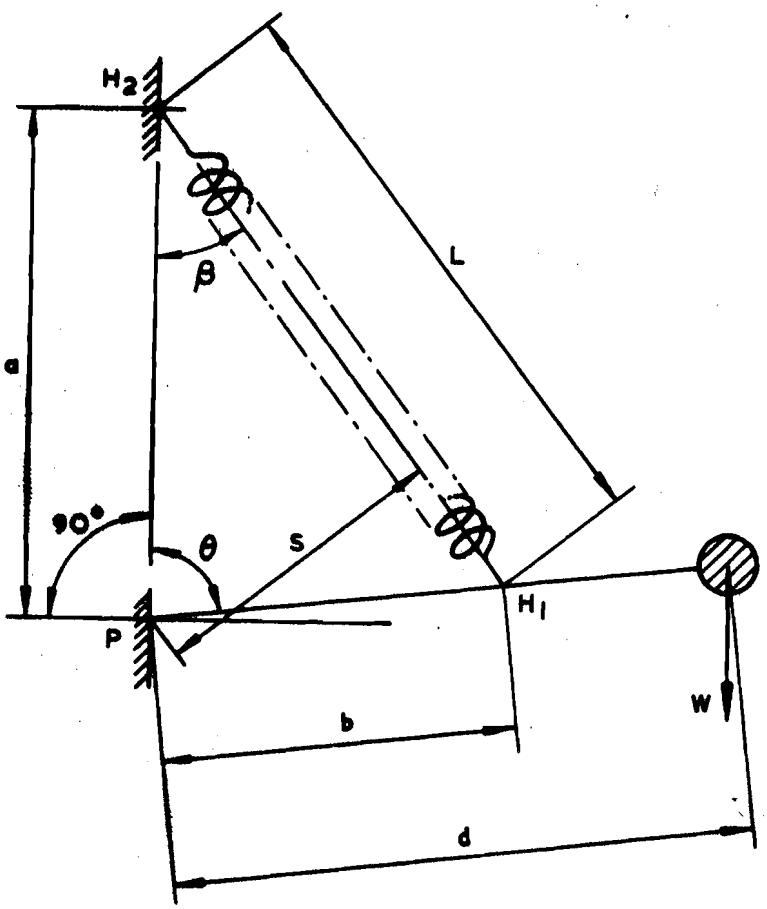

The above arrangement is shown in a simpler form in Figure 2 and is described in Section 2.1.

PROOF FOR THE CONDITION OF STABILITY WITH INFINITE PERIOD

Zero-length spring tension = kL, where k is the spring constant .

Torque produced by the spring

$$N_s = - kLs.$$

Torque produced by the inertial mass

$$N_w = Wd \sin \theta,$$

1. H. Benioff: "Earthquake Seismographs and Associated Instruments". pp. 255 - 257

$$\text{since} \quad L = \frac{b \sin \theta}{\sin \beta}$$

$$\text{and} \quad s = a \sin \beta$$

$$\text{then} \quad N_s = - kab \sin \theta.$$

Total torque is, therefore

$$N = N_W + N_S = (Wd - kab) \sin \theta.$$

If $Wd = kab$, then $N = 0$ for all values of θ, and the period is infinite for all positions of the boom.

Deviation from theory is caused by restoring forces at points H_1, H_2 and P, and by distortion of the helical spring under its own weight. The last effect causes the tension vector not to pass through H_2 (from origin H_1), but through a point somewhat nearer P, the position of the point depending on boom deflection.

APPENDIX B

THEORY OF THE TRIANGULAR CANTILEVER LEAF-SPRING

Consider the cantilever AB as in Figure 16. It has free length L, fixed at A, with load W, at B. Consider the section K-K of the cantilever, distance x from A. The bending moment M at K-K is expressed as

$$M = W(L - x).$$

In Figure 17 is shown a small length m, of the cantilever centred on section K-K. This element is bounded by the surfaces MN, UN, UT, TM. The neutral surface PQ subtends an angle ϕ at its centre of curvature and, if the radius of curvature is R, then PQ = $R\phi$. Since QV is parallel to PM, and since FG is the length of a stretched fibre, distance z from the neutral surface, then FW = PQ = m, the normal length of the fibre, while dm is its extension. The tensile strain is then dm/m and, if p is the magnitude of the internal force which produced this extension,

$$\frac{p}{\alpha} = E\frac{dm}{m}$$

where α is the cross sectional area of the fibre and E is Young's modulus for the material of the beam.

But PQ = m = $R\phi$ and dm = $z\phi$ and so $\frac{dm}{m} = \frac{z}{R}$ and $\frac{p}{\alpha} = \frac{E}{R}z$

$$\therefore \quad p = \frac{E}{R}z.\alpha.$$

The moment of p about Q is

$$pz = \frac{E}{R}z^2\alpha.$$

and so the internal bending moment, which is the sum of all such terms, is

$$\Sigma\ pz = \frac{E}{R}\Sigma\ z^2\alpha.$$

The quantity $\Sigma\ z^2\alpha$ is analogous to the moment of inertia about the neutral axis and is called the "geometrical moment of inertia" of the cross section about the axis. It is equal to AK^2, where A is the cross sectional area and k is the radius of gyration.

Hence, internal bending moment = $\frac{EAk^2}{R}$ and this must balance the moment of the external forces at the section K-K.

---

1. F. H. Newman and V. H. L. Searle: "The General Properties of Matter", 4th Edition, pp. 103 - 105

We have, therefore,

$$W(L - x) = \frac{EAk^2}{R}$$

$$\text{or} \quad R = \frac{EAk^2}{W(L - x)} .$$

Now A = bt, where b is the width of the cantilever at section K-K and t is its thickness.

If t is constant for the whole cantilever,

$$R = \frac{Etk^2}{W} \left[\frac{b}{L - x}\right].$$

If the cantilever is triangular in shape with its base at A and its apex at B in Figure 16, then

$$\frac{b}{L - x} = \text{constant}$$

and R is a constant for each discrete value of W.

Hence, a triangular cantilever clamped at its base, having a constant thickness, will, when loaded at its apex, bend into a circular arc.

Also, since WR = constant, then $\frac{W}{\rho}$ = constant, where $R = \frac{1}{\rho}$ and ρ is the curvature, and we may write $\frac{dW}{d\rho}$ = constant.

So, for a triangular leaf spring, $dW = Kd\rho$, where K is the spring constant.

In Figure 18 a triangular leaf spring of length L has a relaxed position of the form of a circular arc, and is extended nearly flat by a load W at its apex. The extension is y, and a further extension dy is caused by an increase in load dW.

Consider an element dx of the spring distance x from the fixed end of the spring. Then

$$dy = \int^{1} x d\rho dx = \frac{1}{2}L^2 d\rho,$$

$$\therefore \; -y = \frac{1}{2}L^2\rho = \frac{1}{2}\frac{L^2}{R} ,$$

R now being the radius of curvature of the spring in its relaxed position. To obtain the simplest possible geometry in the system, y can be made equal to L, and then

$$R = \frac{L}{2}.$$

Under this condition, the triangle in Figure 4 shows how, for small amplitudes, the load W will vibrate on the apex of the triangular spring, almost exactly as it would if attached to a spiral spring of the same length L, fixed at the point F, the approximation being, of course, due to the (arcuate) movement of the spring tip. It can be shown (empirically, by graphical construction) that the locus of the spring tip is the arc of a circle of radius ¾L.

APPENDIX C

GLOSSARY OF TECHNICAL TERMS

Seismograph

A complete system for recording earth movements, consisting of seismometer, amplifier (or, in some cases, galvanometer) and recording system (pen on paper, photographic emulsion, magnetic tape, etc.).

Seismometer

The first stage, or detector, of a seismograph, usually comprises an inertial mass in some form of pendulum, suspended from a rigid framework, and a transducer which converts the relative movement between mass and frame to an electrical analogue. The suspension restricts the degrees of freedom of the inertial mass to the one of the component of earth movement being recorded.

Inertial Mass

That part of a seismometer which tends to remain at rest with respect to the average position of the ground, as the ground and seismometer framework oscillate.

Pendulum Performance

The degree of independence of the pendulum and its suspension from all effects, mechanical and environmental, except ground motion of the single component being measured, and the degree to which the relationship between the pendulum and the ground is stable and linear.

Helical Spring

A spring in the form of a helix. Not to be confused with spiral springs. A "zero-length" helical spring has built-in pretension such that the load/spring-length curve passes through the origin.

Ni-Span and Iso-Elastic Alloys

Nickel steels with low temperature dependence used as the material for precision springs. Iso-Elastic is work-hardened to obtain its tensile strength, while Ni-Span C and D are heat-treated. Ni-Span D is not suitable for zero-length helical springs as the heat-treatment removes the pretension. Ni-Span C, however, can be heat-treated for zero thermo-elastic coefficient at a temperature low enough not to remove pretension, if the penalty of low tensile strength (and, therefore, greater spring mass) can be accepted.

All three materials have inherently low creep and hysteresis, Ni-Span D exceptionally so. Ni-Span D is also the optimum alloy for a combination of high tensile strength and low temperature coefficient of stiffness.

Long Period

By this is meant periods greater than about 10 s. Usually, long period seismometers are arranged to detect the long-period surface waves emanating from seismic events whose spectrum ranges from 10 to 100 s (in most cases).

The natural period of the seismometer is, therefore, set relative to these limits according to the required parameters of the seismograph, bearing in mind that pendulum stability is inversely proportional to the square of the natural period.

Flotation Compensation

The suspended parts of a vertical-component seismometer displace their own volume of air and so experience an upthrust equal to the weight of that volume of air. When the air density changes, this upthrust changes proportionately, and, if the pendulum is not volume-moment symmetrical about its pivot axis, then, with long natural periods of the pendulum, noticeable deflections occur. Flotation compensation is most easily and reliably effected by balancing the volume moments about the pivot axis, though this is achieved at the expense of a slight loss of dynamic efficiency (see below).

Transducers

In this application, transducers are usually electromagnetic devices which convert movement of the seismometer boom, relative to the frame, into electrical signals which can be amplified as required. There are two basic types used in seismology, namely displacement and velocity transducers.

Displacement transducers, such as the Tucker transducer [1], use the displacement of a coil to modulate the amplitude of an externally generated ac signal supplied to the transducer. A displacement transducer has the disadvantage that it will require accurate centring of the boom. This does not apply to velocity transducers, the only requirement for boom centring being to keep within the linear range of the transducer.

Velocity tranducers are simple devices, and require no external drive. The output of the usual type used is the voltage produced in a coil when it moves in the magnetic field of a permanent magnet. The voltage is proportional to the relative velocity of the coil and magnetic field.

---

1. M. J. Tucker: (September 1952) "A Linear Transducer for the Electrical Measurement of Displacements". Electrical Engineering, 24, 295, 420 - 422

Dynamic Efficiency

The degree of approach to a point mass on a weightless boom afforded by the compound pendulum that is the suspended sub-assembly of a seismometer. It is found by swinging the sub-assembly as an ordinary pendulum about its pivot axis, measuring the natural period, and calculating the length of the **simple pendulum** with that period. The ratio of the distance of the centre of gravity from the pivot axis to the length of the equivalent simple pendulum is the dynamic efficiency, which is usually expressed as a percentage.

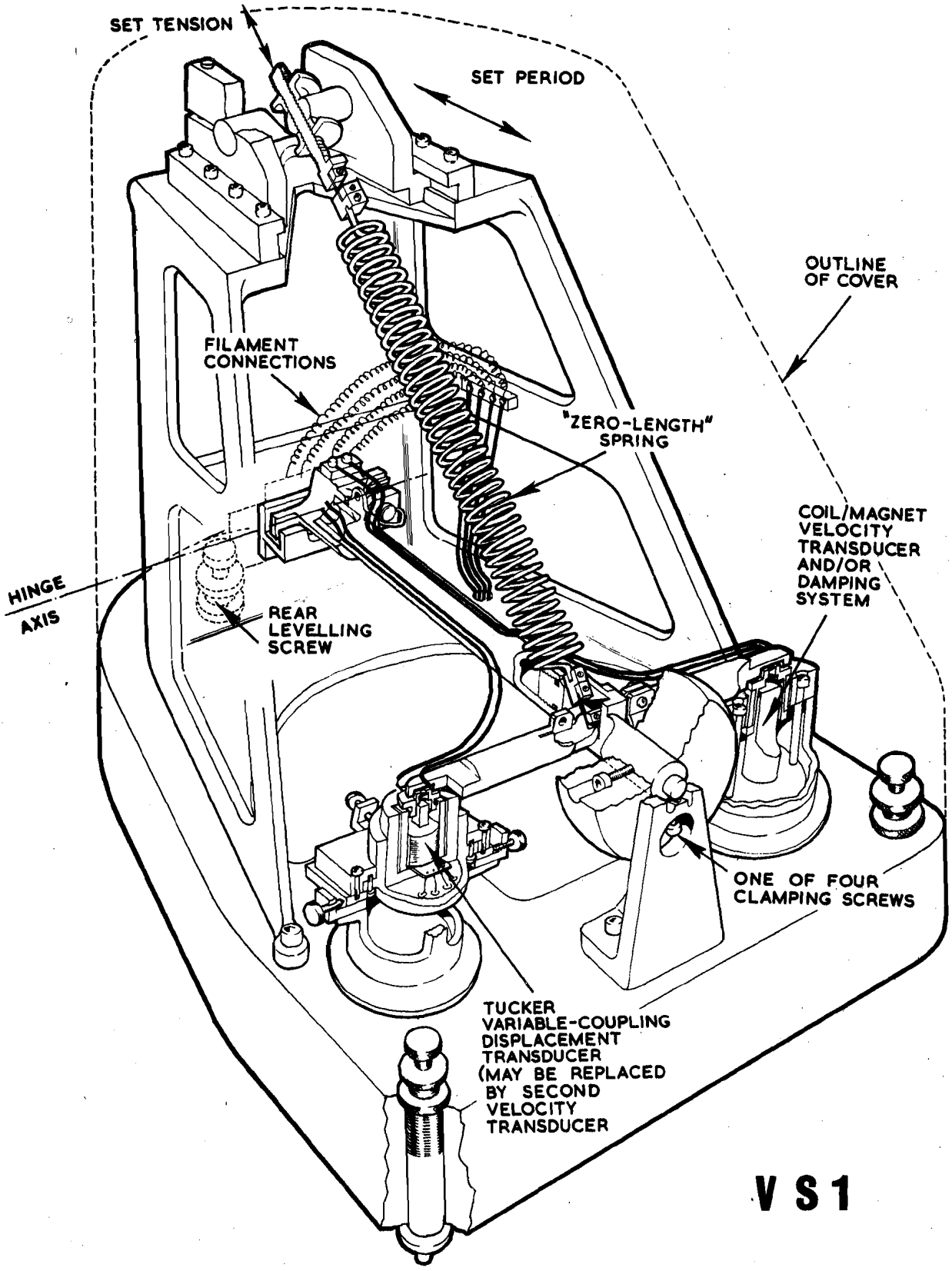
SET TENSION
SET PERIOD
OUTLINE OF COVER
FILAMENT CONNECTIONS
"ZERO-LENGTH" SPRING
COIL/MAGNET VELOCITY TRANSDUCER AND/OR DAMPING SYSTEM
HINGE AXIS
REAR LEVELLING SCREW
ONE OF FOUR CLAMPING SCREWS
TUCKER VARIABLE-COUPLING DISPLACEMENT TRANSDUCER (MAY BE REPLACED BY SECOND VELOCITY TRANSDUCER
VS1

FIGURE 1

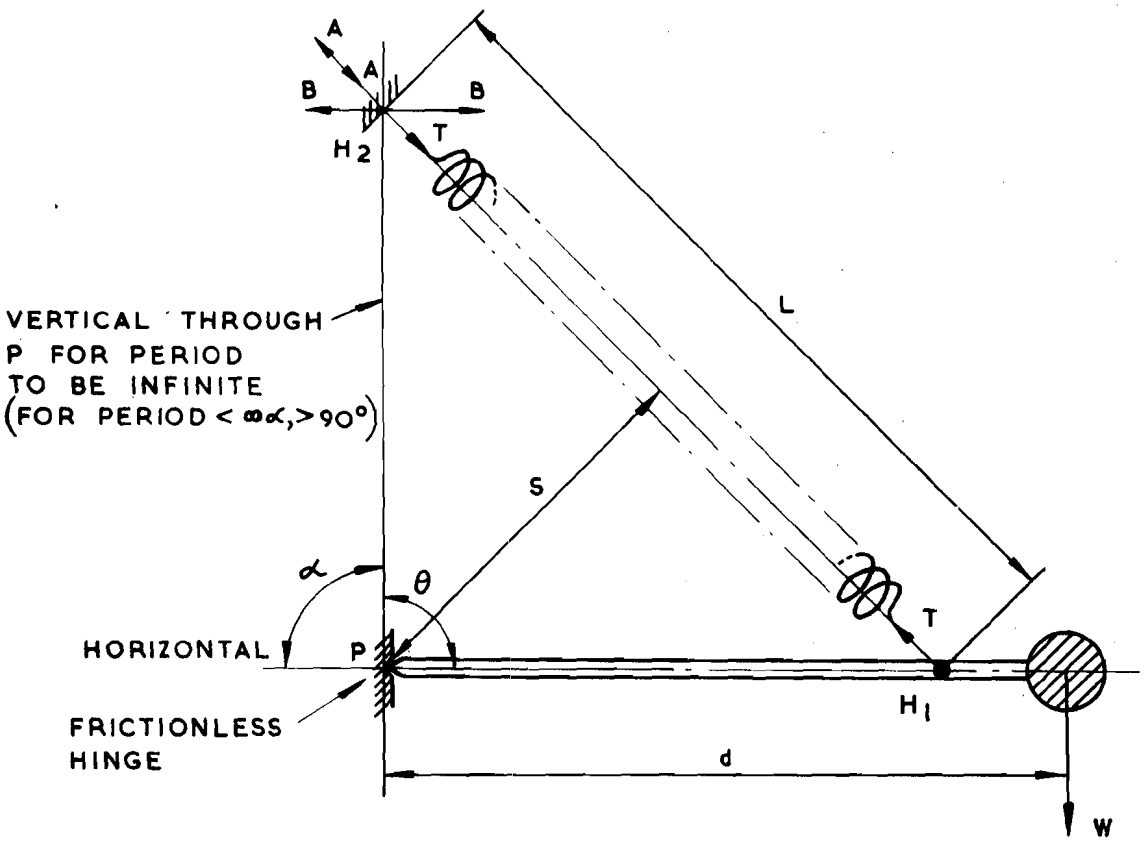

FIGURE 2. THE LACOSTE SUSPENSION

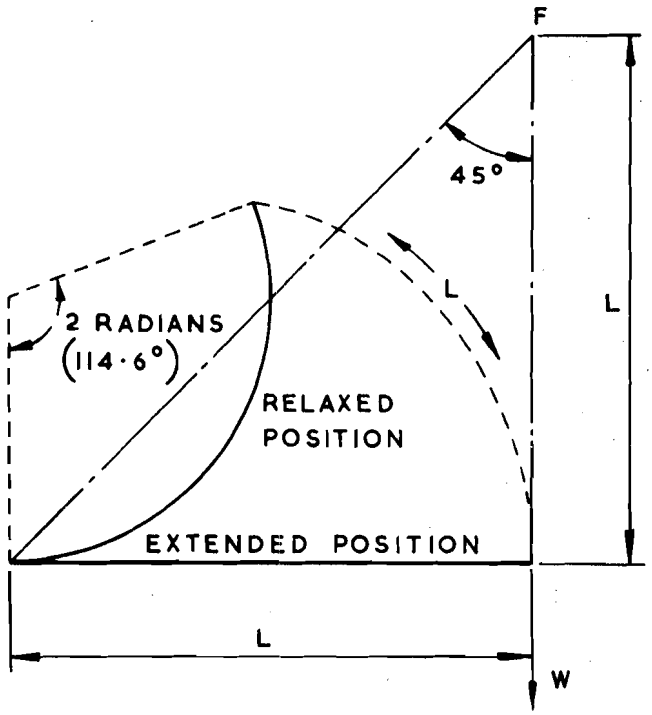

FIGURE 3. THE OPERATION OF A TRIANGULAR CANTILEVER LEAF-SPRING

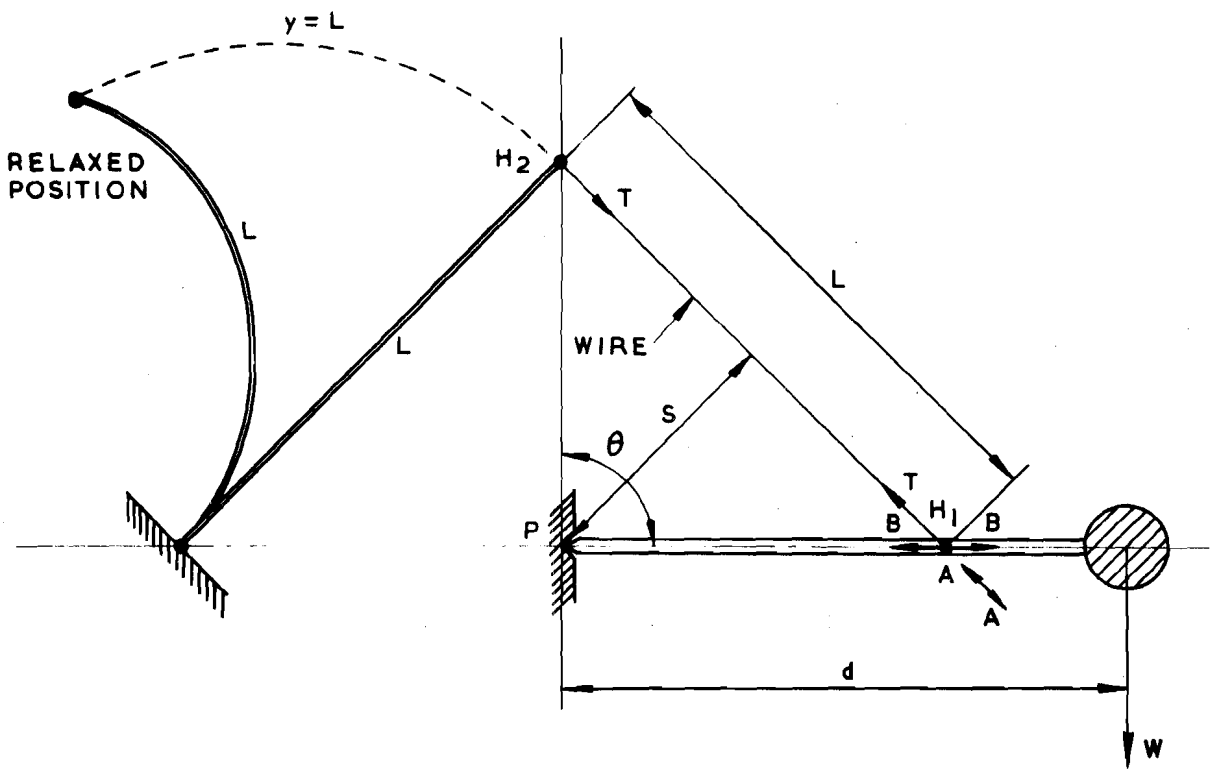

FIGURE 4. APPLICATION OF THE TRIANGULAR CANTILEVER LEAF-SPRING TO THE LA COSTE SUSPENSION

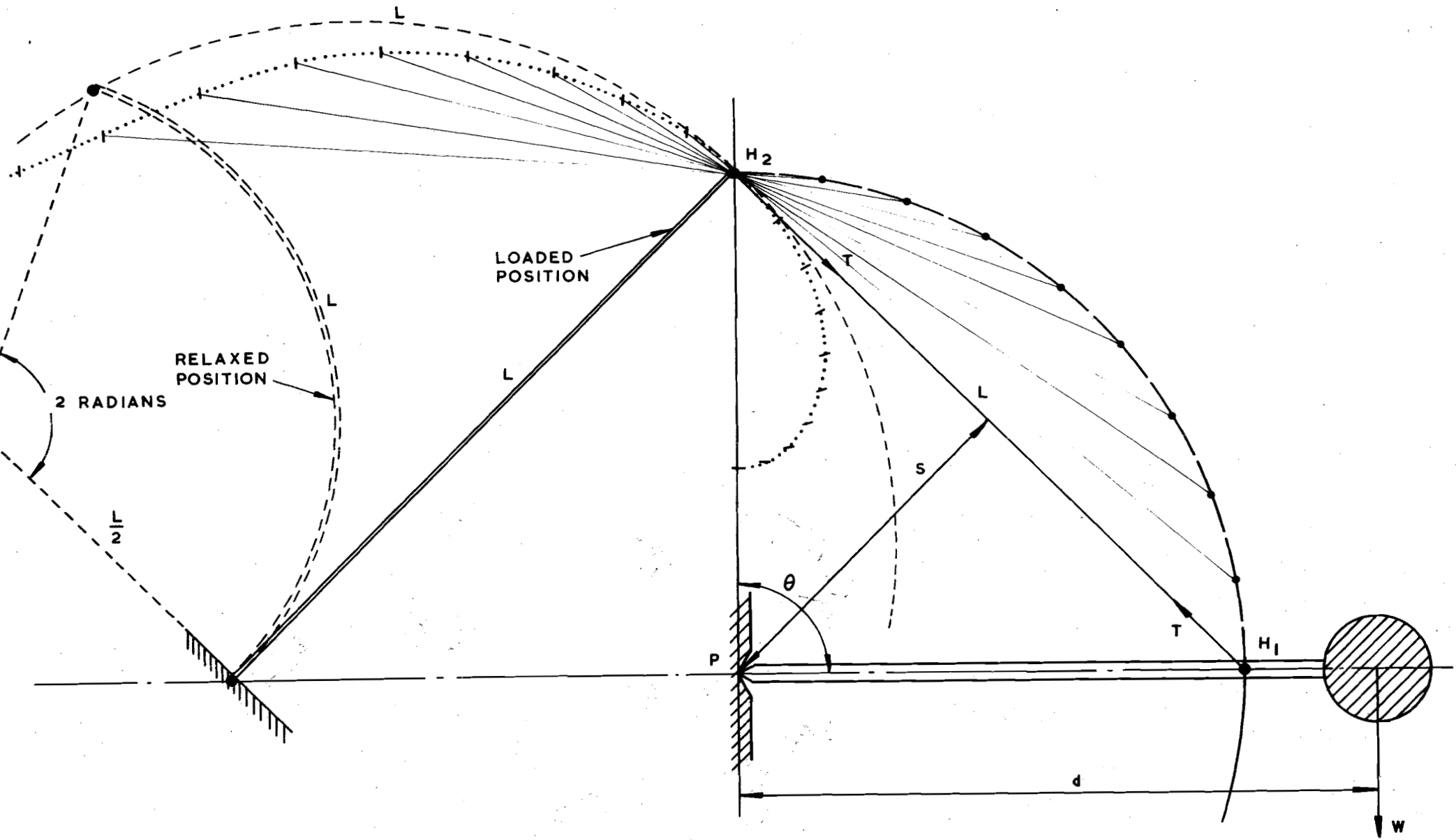

FIGURE 5. ILLUSTRATING THE APPROXIMATIONS INVOLVED IN THE USE OF A LEAF-SPRING

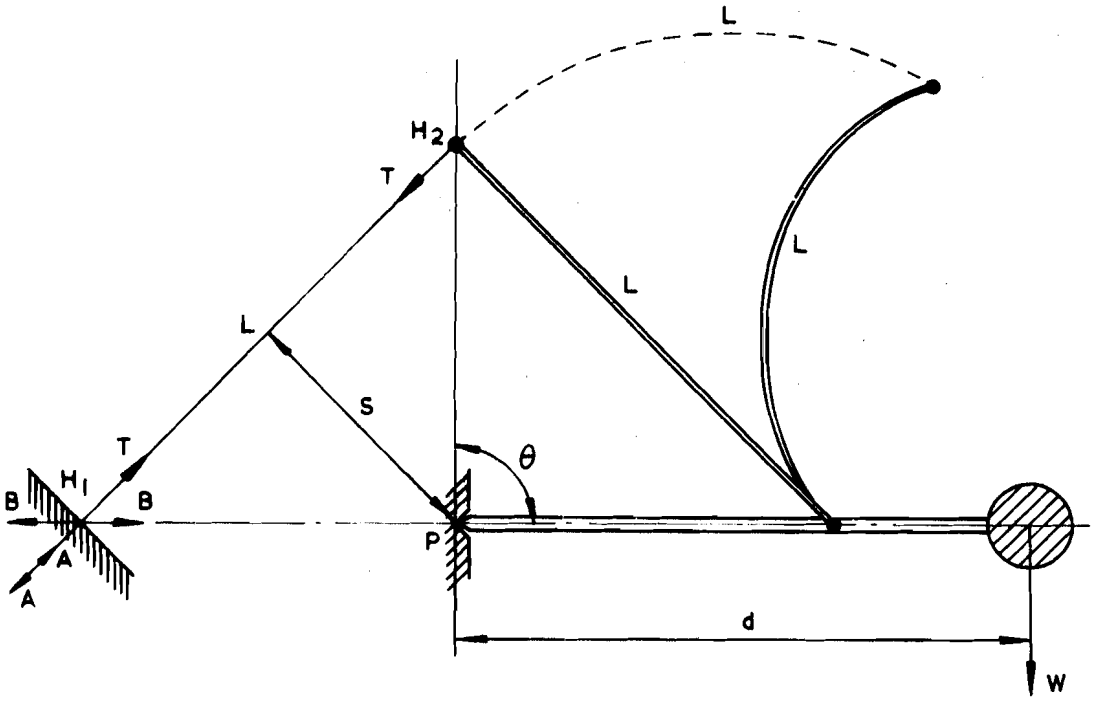

FIGURE 6. REVERSED LEAF-SPRING SUSPENSION

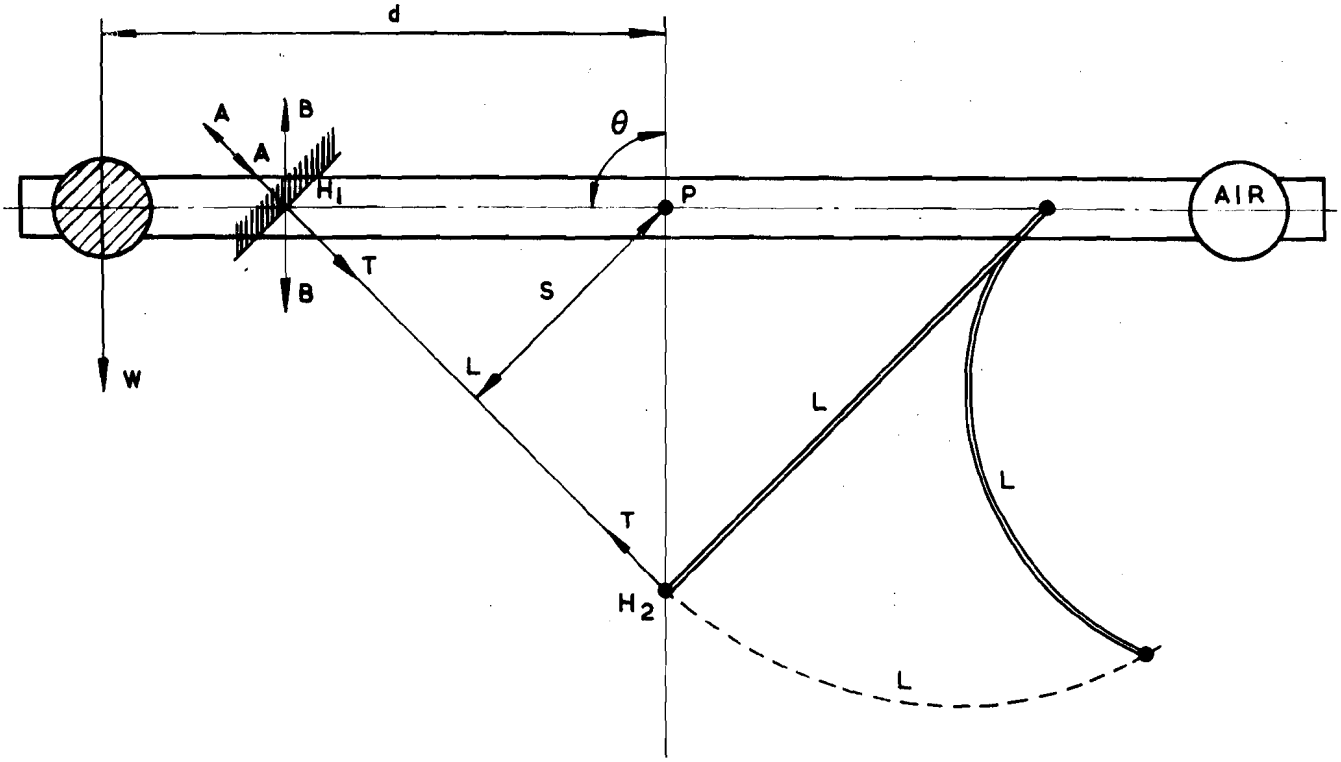

FIGURE 7. REVERSED AND INVERTED LEAF-SPRING SUSPENSION

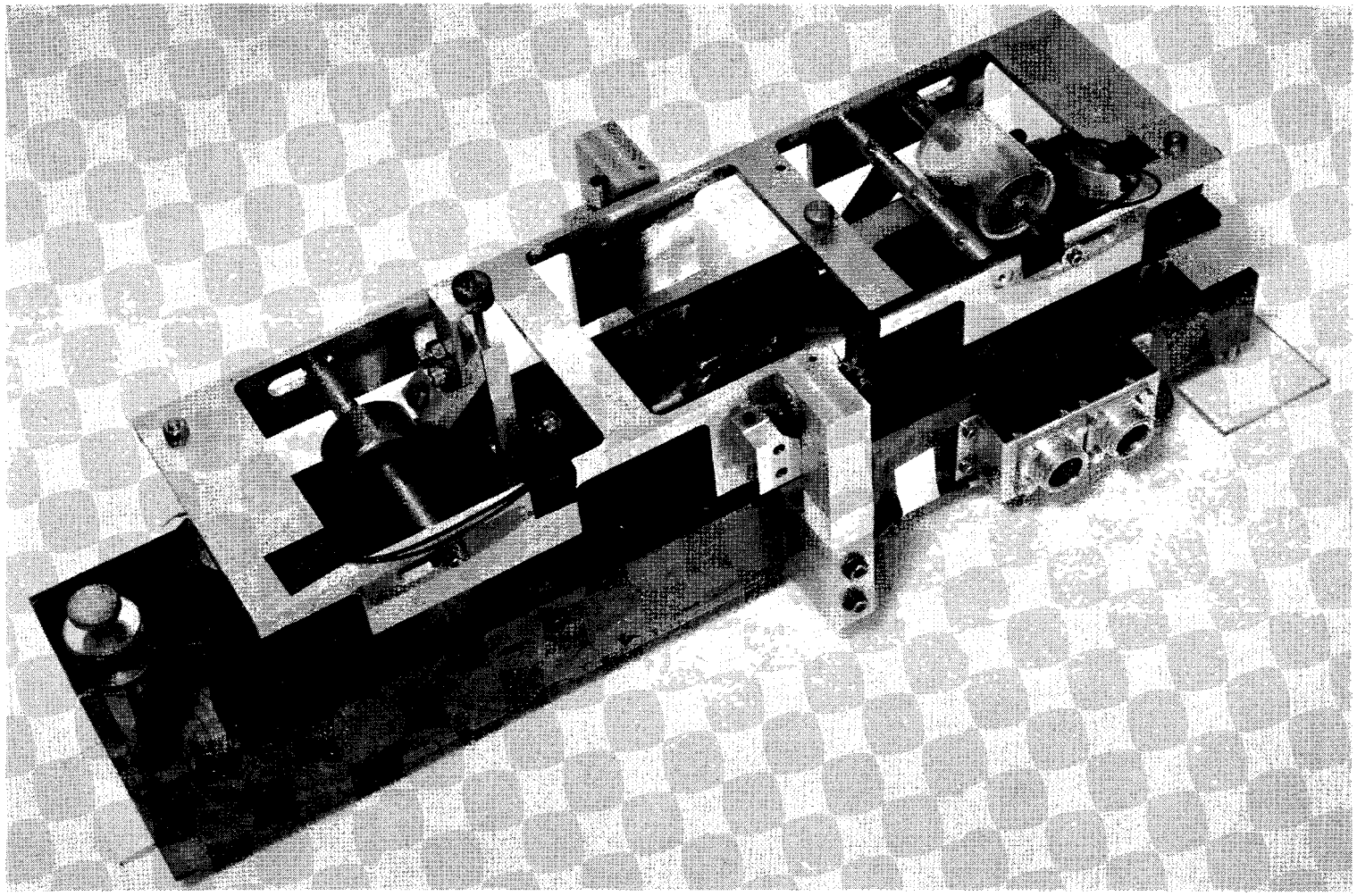

FIGURE 8. SUSPENSION ARRANGEMENTS LEADING TO THAT USED IN THE VS3

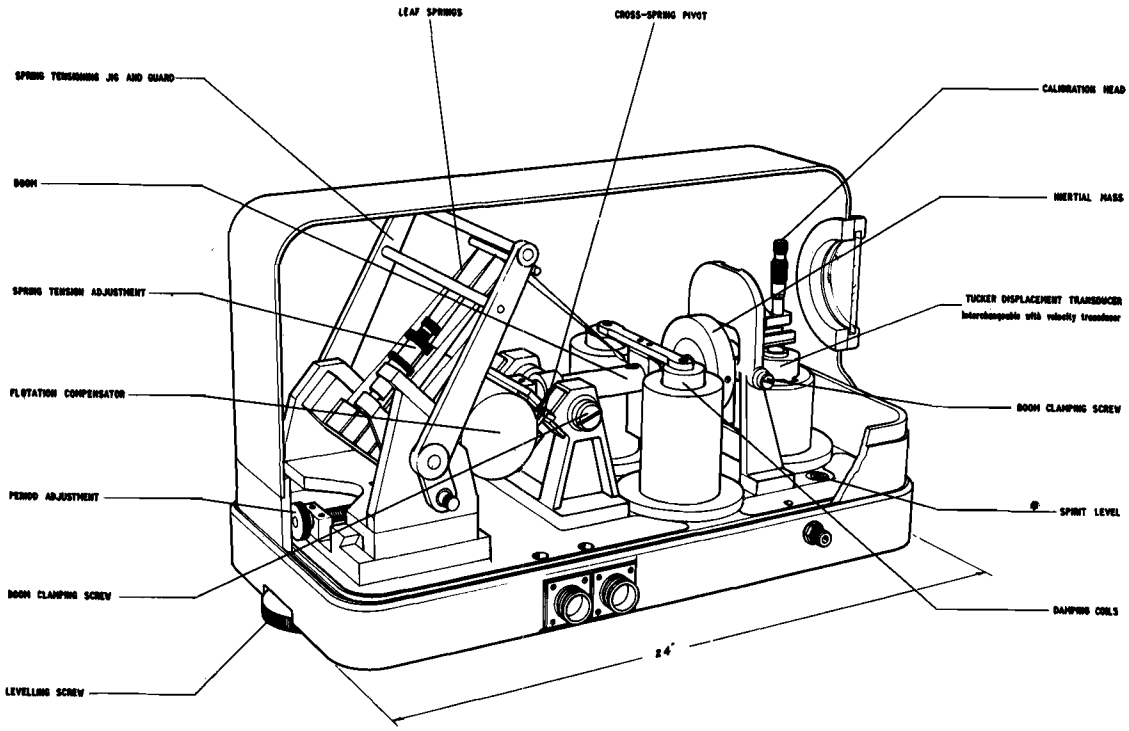

FIGURE 9. KEYED DRAWING OF THE VS4

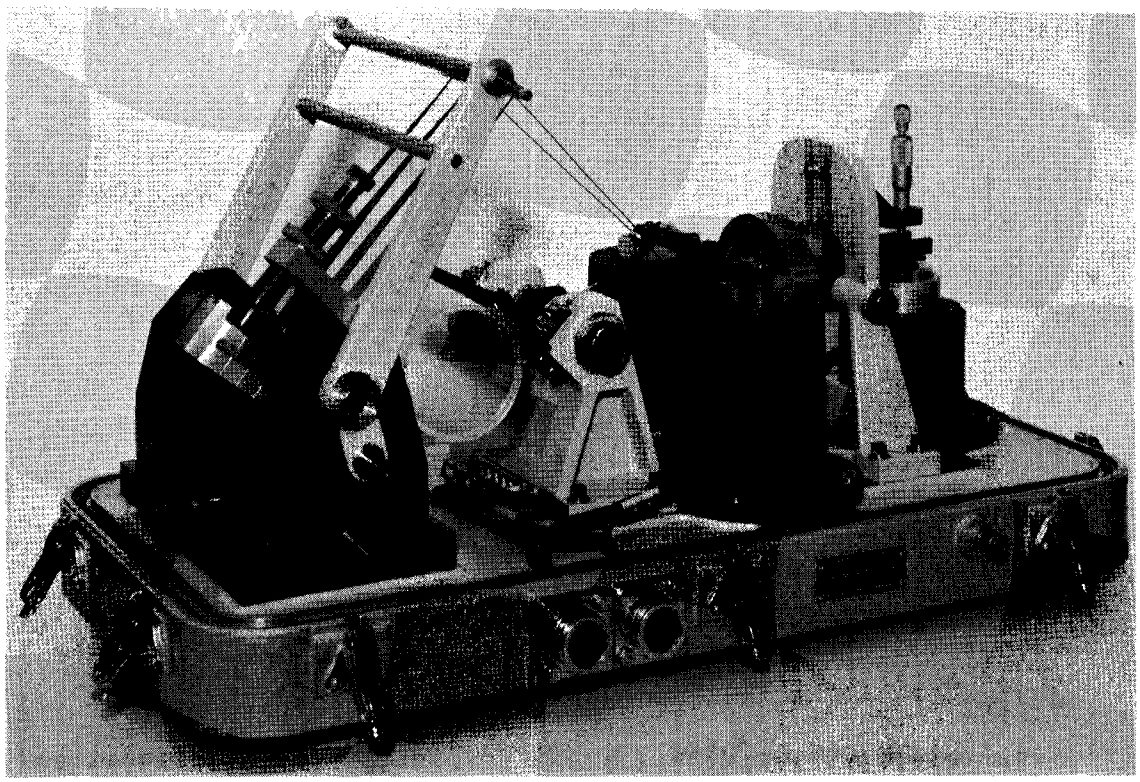

FIGURE 10. PHOTOGRAPH OF VS4 FROM THE SAME ASPECT AS FIGURE 9

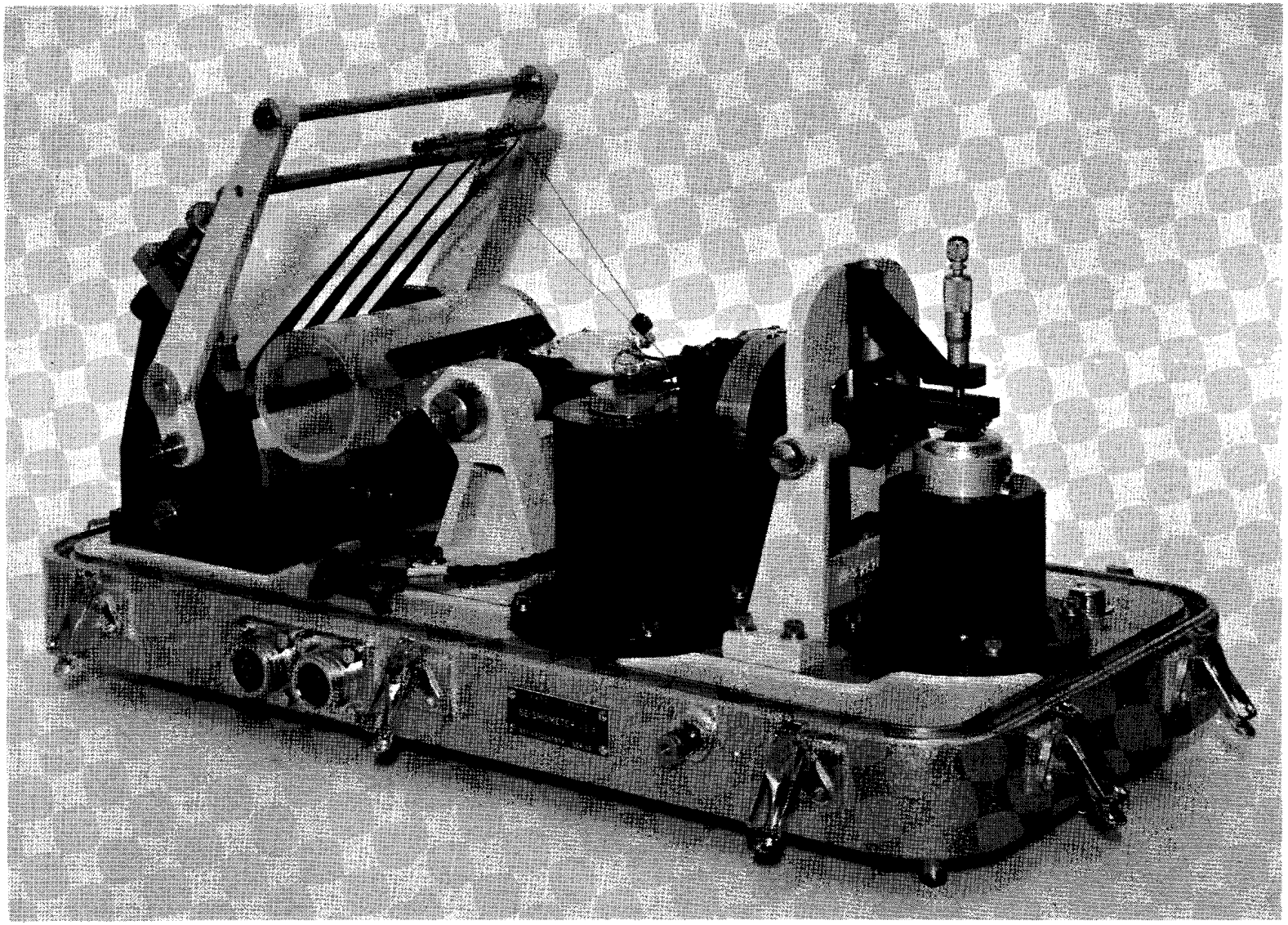

FIGURE 11. PHOTOGRAPH OF VS4 FROM ANOTHER VIEWPOINT

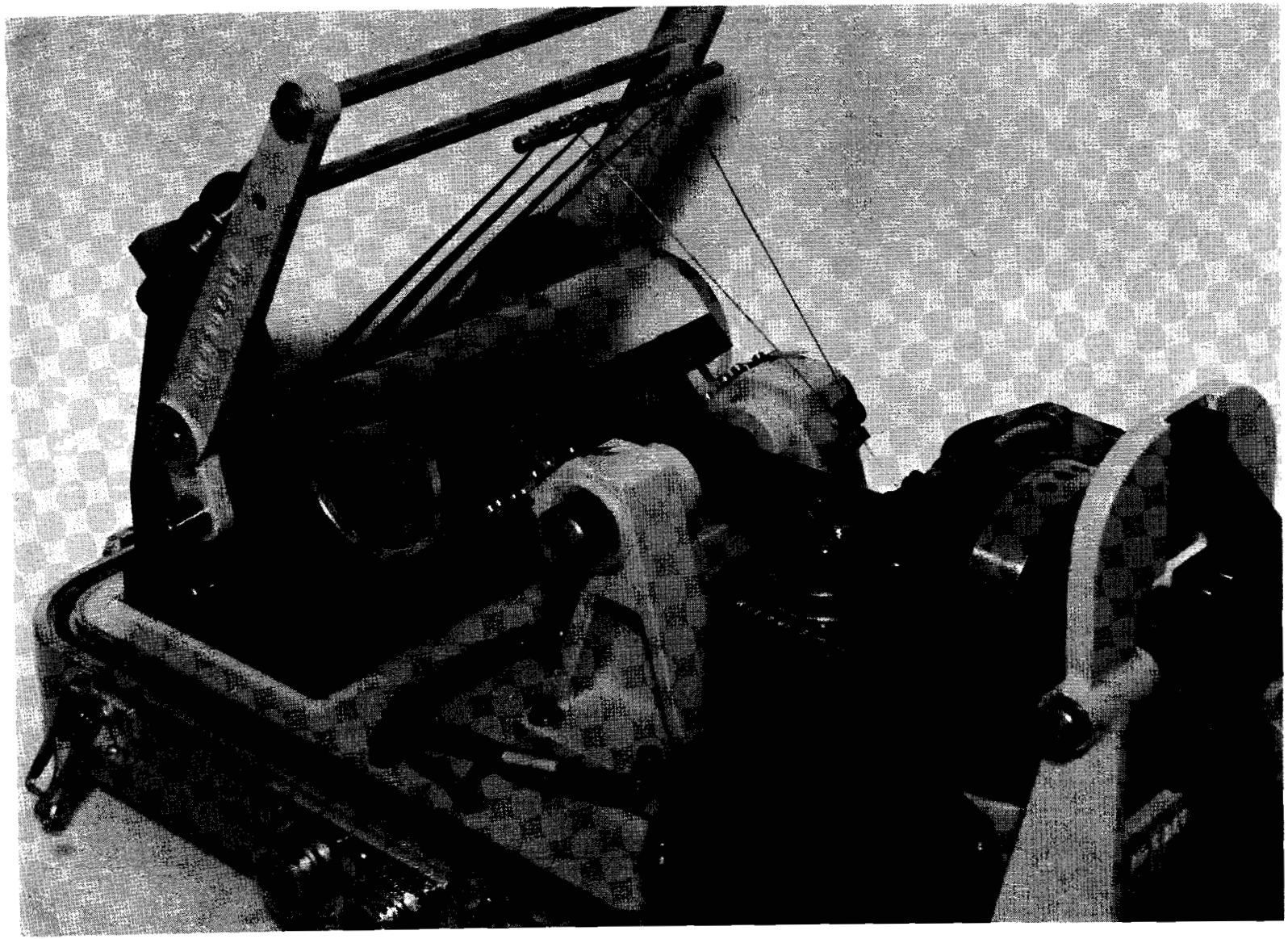

FIGURE 12. PHOTOGRAPH OF PART OF VS4 SHOWING THE LACOSTE SUSPENSION AND THE FLOTATION COMPENSATOR

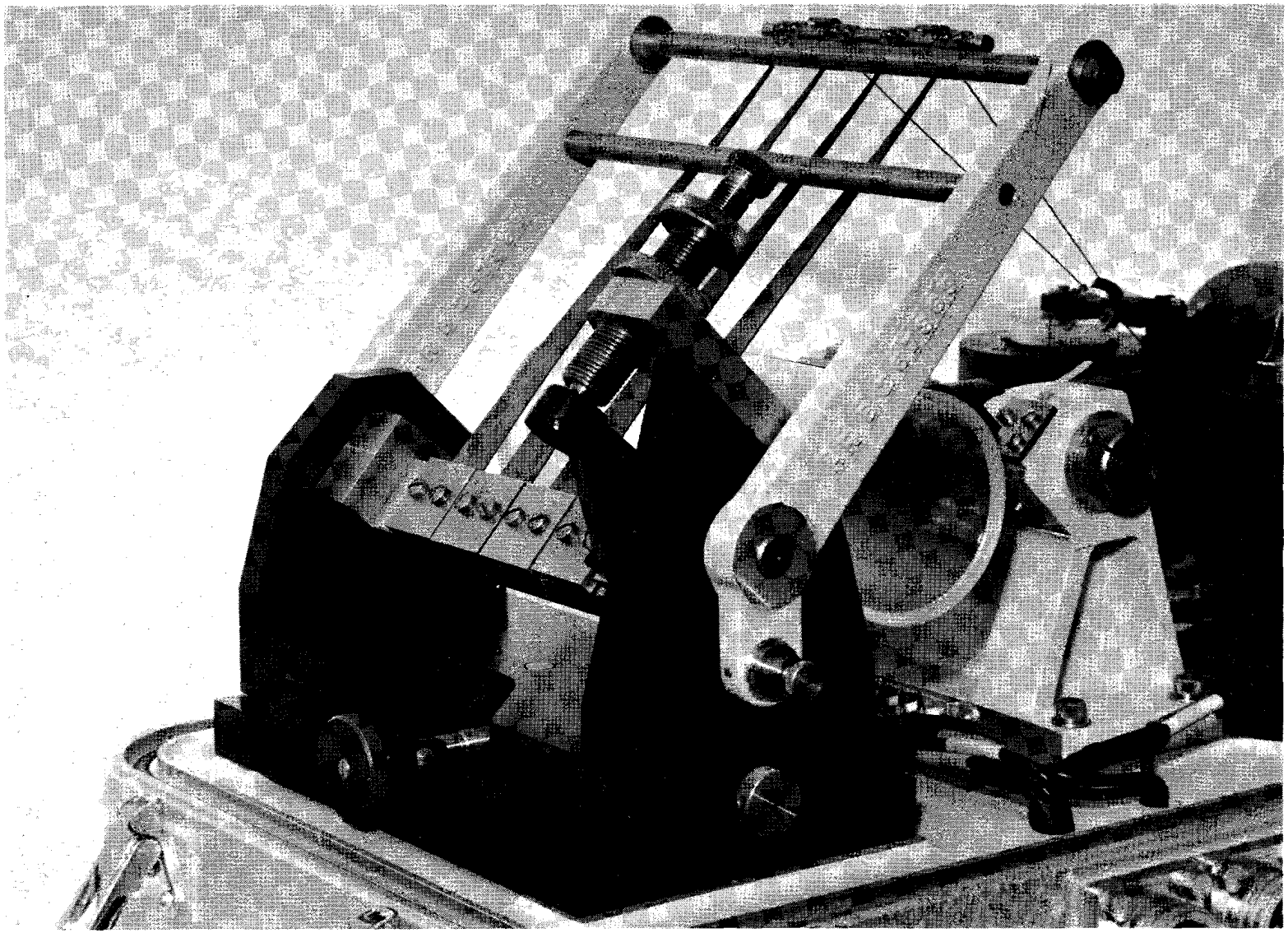

FIGURE 13. PHOTOGRAPH OF THE SPRING MOUNTING SHOWING THE ADJUSTMENTS FOR TENSION AND PERIOD

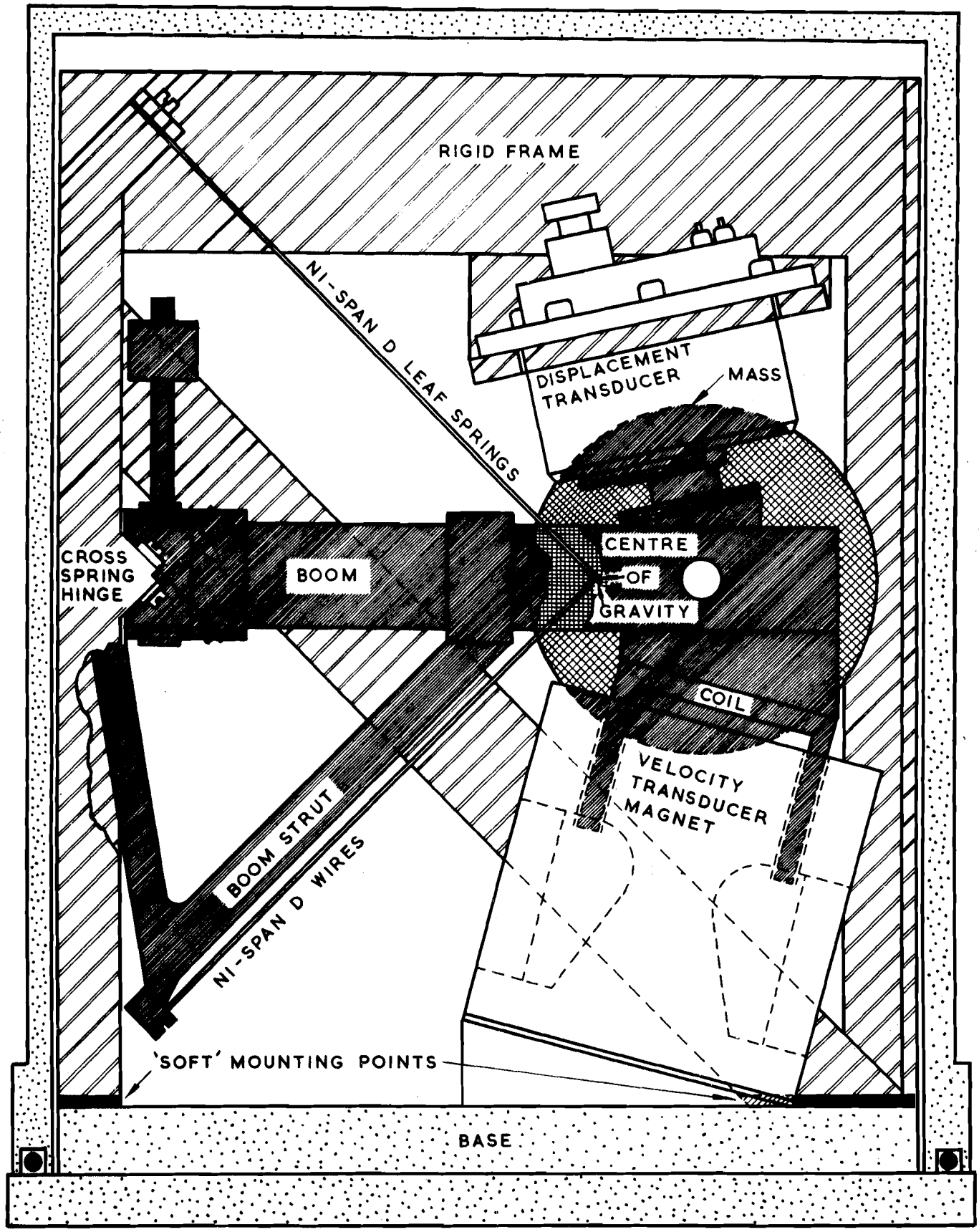

SCALE :- 1:1 APPROXIMATELY

SIDE ELEVATION

FIGURE 14. PROPOSED LEAF-SPRING LONG-PERIOD SEISMOMETER

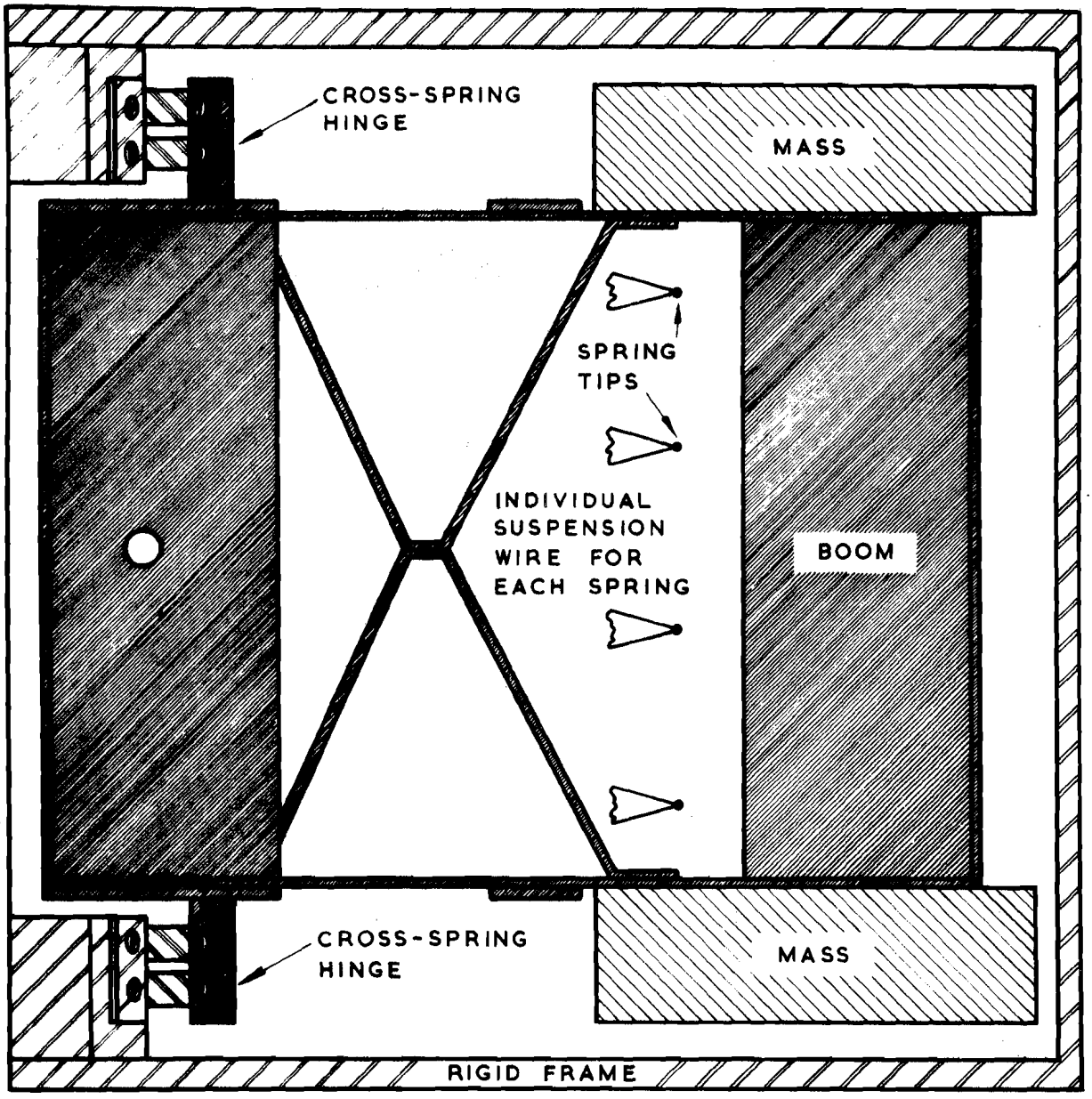

SCALE :- 1:1 APPROXIMATELY

PLAN OF BOOM

FIGURE 15. PROPOSED LEAF-SPRING LONG-PERIOD SEISMOMETER

13152

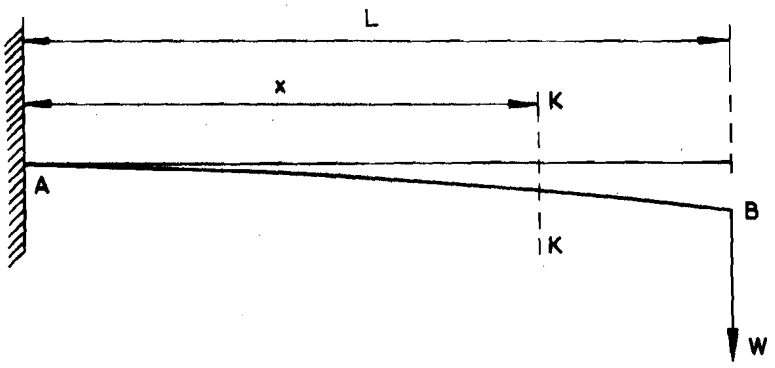

FIGURE 16. A TRIANGULAR CANTILEVER CLAMPED AT ITS BASE

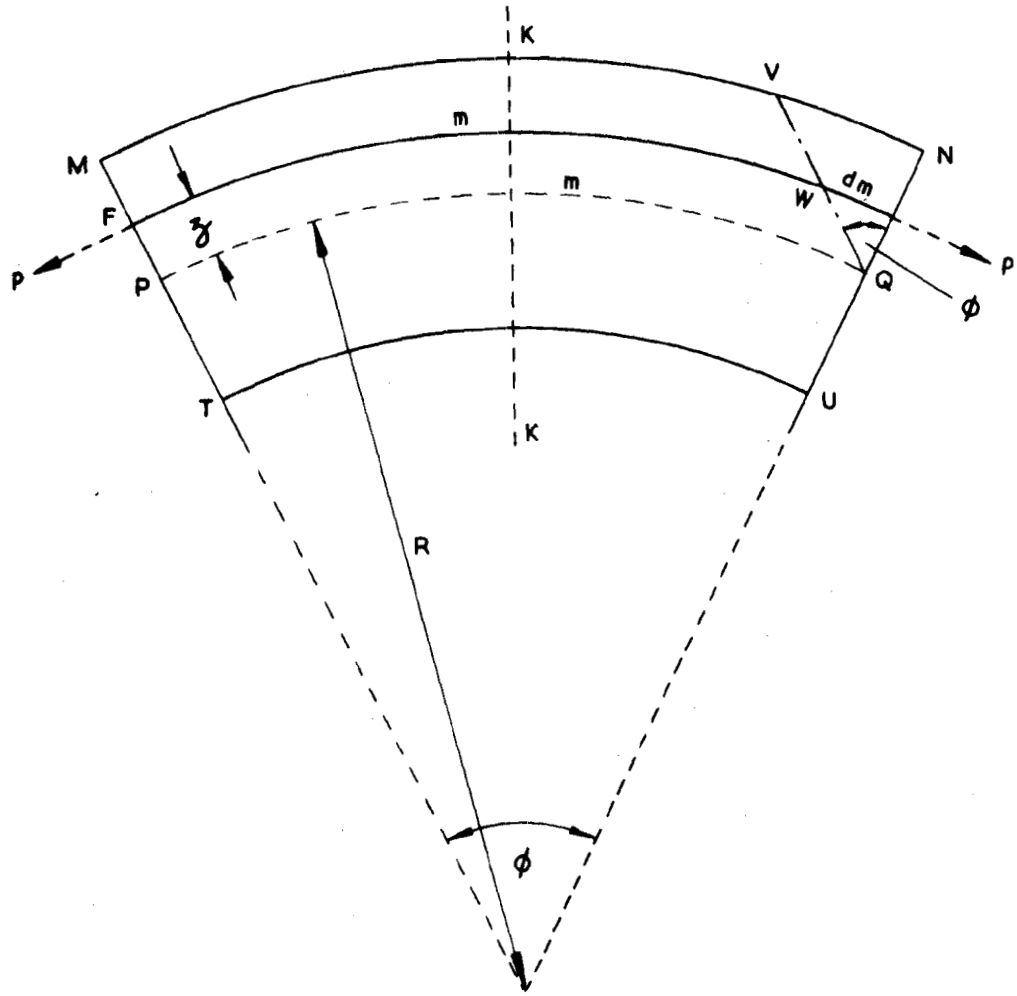

FIGURE 17. SECTION OF CANTILEVER

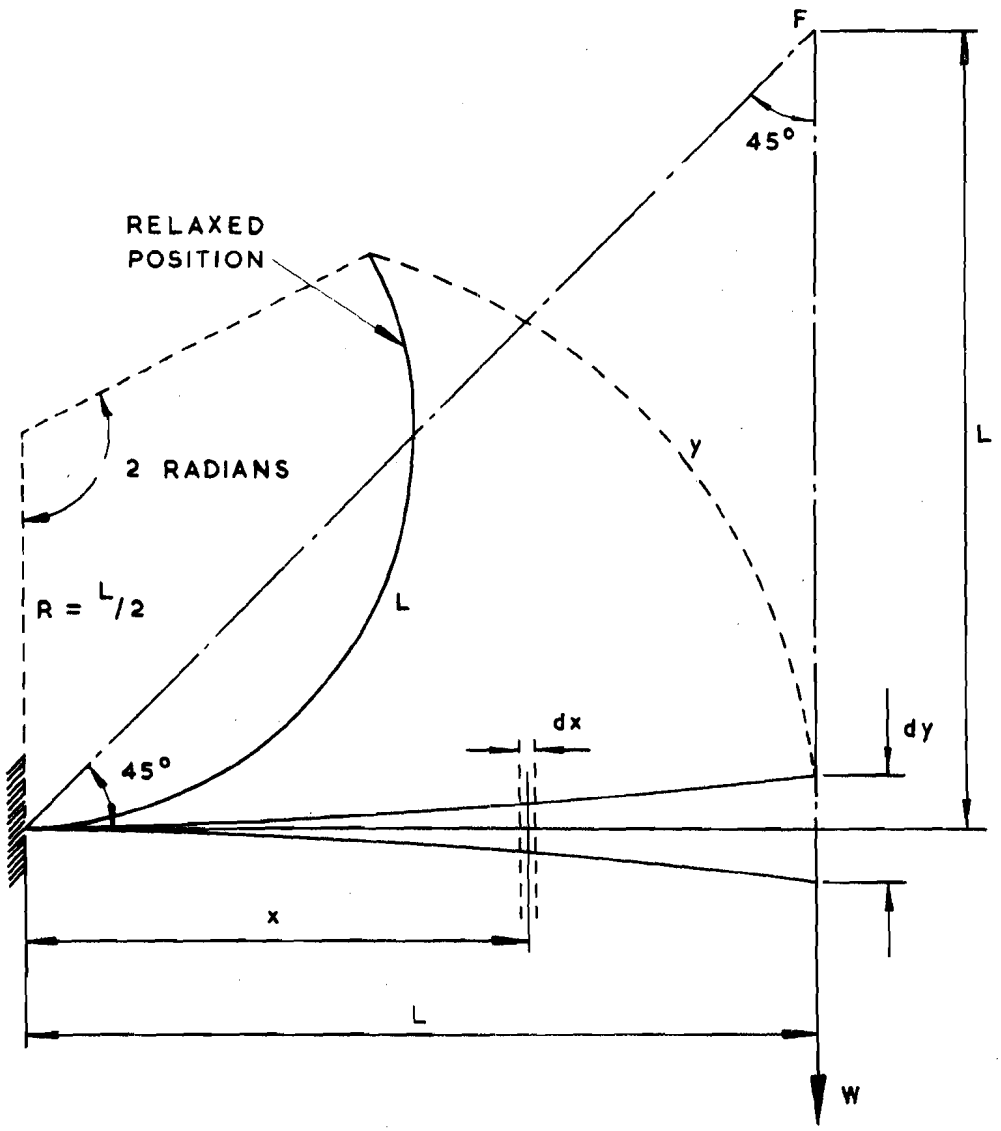

FIGURE 18. OPERATION OF THE TRIANGULAR CANTILEVER LEAF-SPRING